

RIDGEWAY
SITE PRODUCTS

THE TOTAL SOLUTION IN BARRIER SYSTEMS





Armco Information Book

Barrier systems for use in off road applications, providing a low energy vehicle impact deterrent.

Belfast-
103 Airport Road West
Belfast
BT3 9ED
Tel: +44 (0) 28 9045 4599

Ashbourne:-
Units 1&2 Greene Park
Ratoath Road
Ashbourne
Co. Meath A84 XD98
Tel: +353 (01) 802 7173

Email:- info@ridgeway-online.com
Web:- www.ridgewaysiteproducts.com

>Beams C35 Slotted Angle Beam

Specification			
Part No	Description	Length	Weight (kgs)
C35	Slotted Angle Beam	1600	22.3

Material Calculator:
>Divide totallength by 1.6m
>Add 8 x F07SH Lap Joint Bolts per connection

- beam to beam

Notes:
>Material: BS EN 10025 Grade S275JR - 3mm
>Finish: BS EN ISO 1461 Galvanised

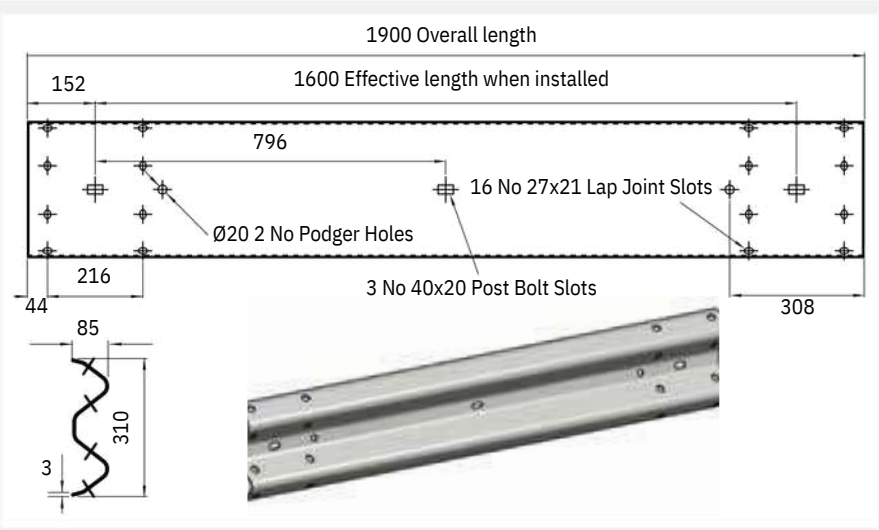

C35 Slotted Angle Beam

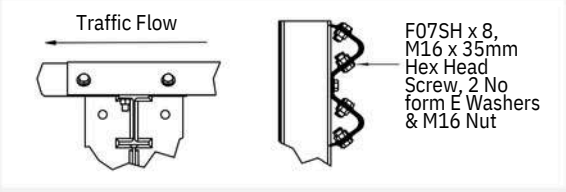

Beam Lap Joint Assembly Details

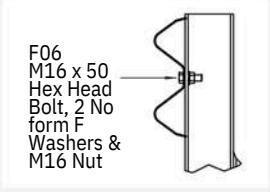

Beam to Post Assembly Details

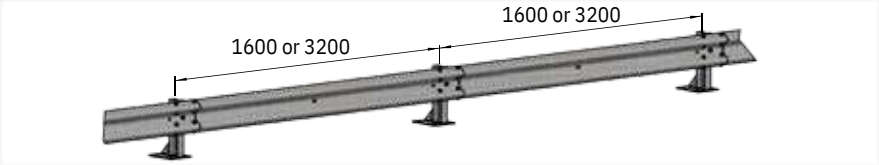

Corrugated Beam Arrangement Details

>Beams Corrugated Beam

Material Calculator:
>Divide totallength by 3.2m
>Add 8 x F07SH Lap Joint Bolts per connection
- beam to beam
>For non standard Beam lengths please contact us for further information

Specification

Part No	Description	Length	Weight (kgs)
ORC66	2.5mm Corrugated Beam	3200	27.4
C01	3mm Corrugated Beam	3200	63.5

Notes:
>Material: BS EN 10025 Grade S275JR (ORC066-2mm, C01-3mm)
> Finish: BS EN ISO 1461 Galvanised

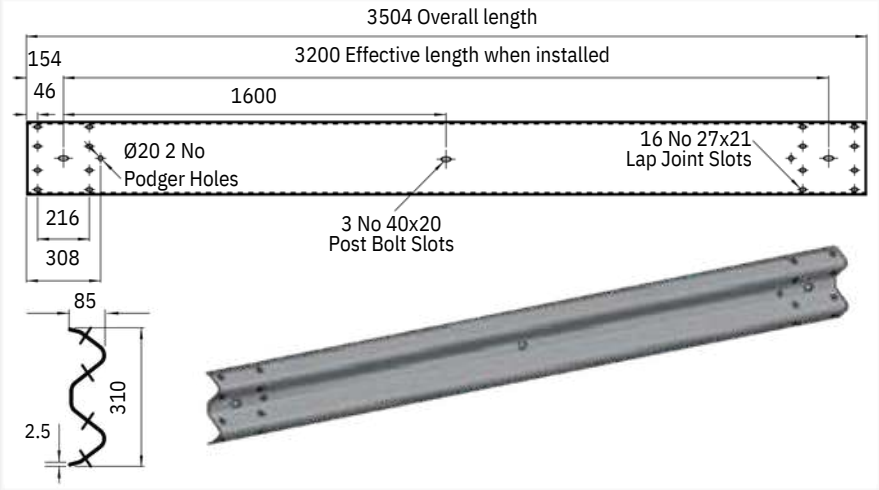

ORC66 Corrugated Beam

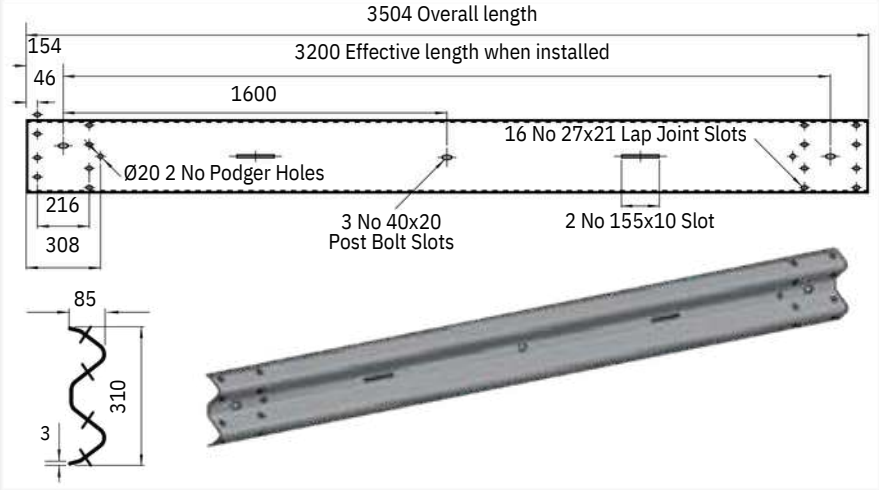

C01 Corrugated Beam

>Posts Concrete-in Z Post

Material Calculator:
>Divide total length of system required by 1.6m or 3.2m and add 1 No
>1 x F06 Post Bolt to bolt Beam to Post, (2 No for double sided)

Notes:
>Material: BS EN 10025 Grade S275JR 5mm
>Finish: BS EN ISO 1461 Galvanised
>Can be used for Double Sided System

Post Variations			
Part No	Description	Length	Weight (kgs)
ORC003-1187	Z Section Post	1187	14.7
ORC003-1487	Z Section Post	1487	18.4

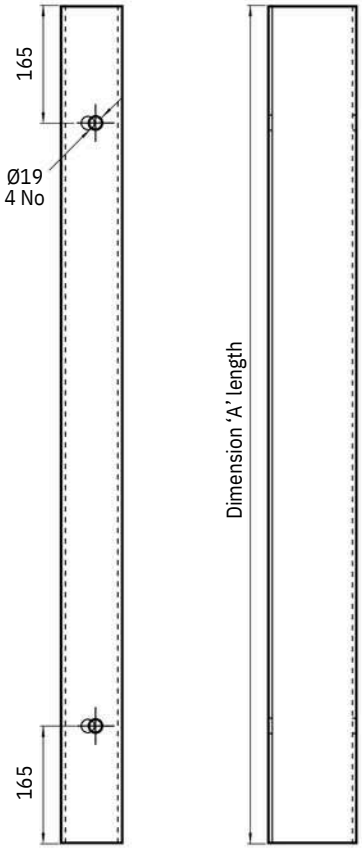



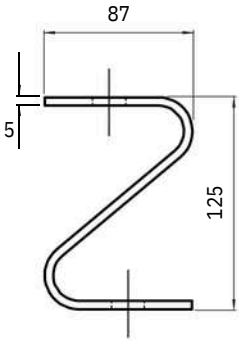

>Posts Surface Mounted Z Post

Post Variations		
Part No	Dim 'A'	Weight (kgs)
ORC009-547	547	7.65
ORC009-747	747	9.25

Material Calculator:
>Divide total length of system required by 1.6m or 3.2m and add 1 No
> 1 x F06 Post Bolt to bolt Beam to Post

Notes:
>Material: BS EN 10025 Grade S275JR
>Finish: BS EN ISO 1461 Galvanised
>Base anchor/fixing requirements are dependant on the specific site slab/foundation and would need to be determined and supplied by third parties *(Please see page 11 for post section properties).*

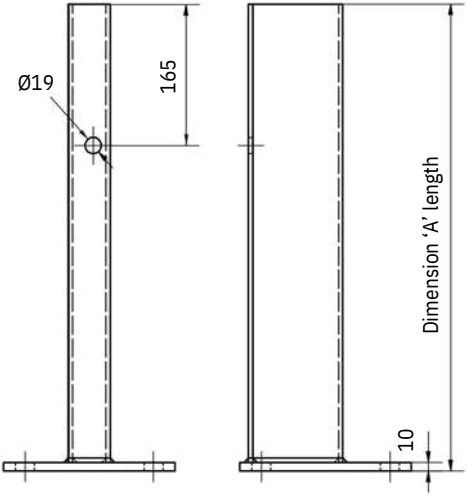

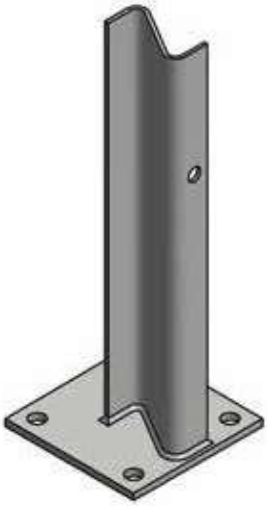

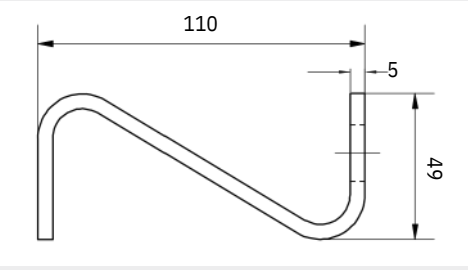

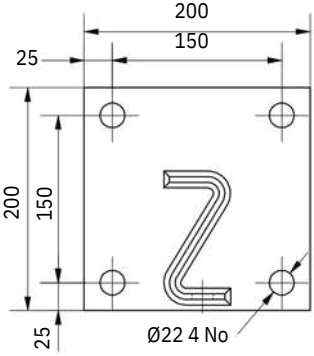

>Posts Concrete-in RSJ Post

Material Calculator:
>Divide total length of system required by 1.6m or 3.2m and add 1 No
> 1 x F06 Post Bolt to bolt Beam to Post

Notes:
>Material: BS EN 10025 Grade S275JR
>Finish: BS EN ISO 1461 Galvanised

Post Variations		
Part No	Dim 'A'	Weight (kgs)
ORC002-1087	1,087	14.85
ORC002-1187	1,187	16.20
ORC002-1487	1,487	20.30
ORC002-1787	1,787	24.40

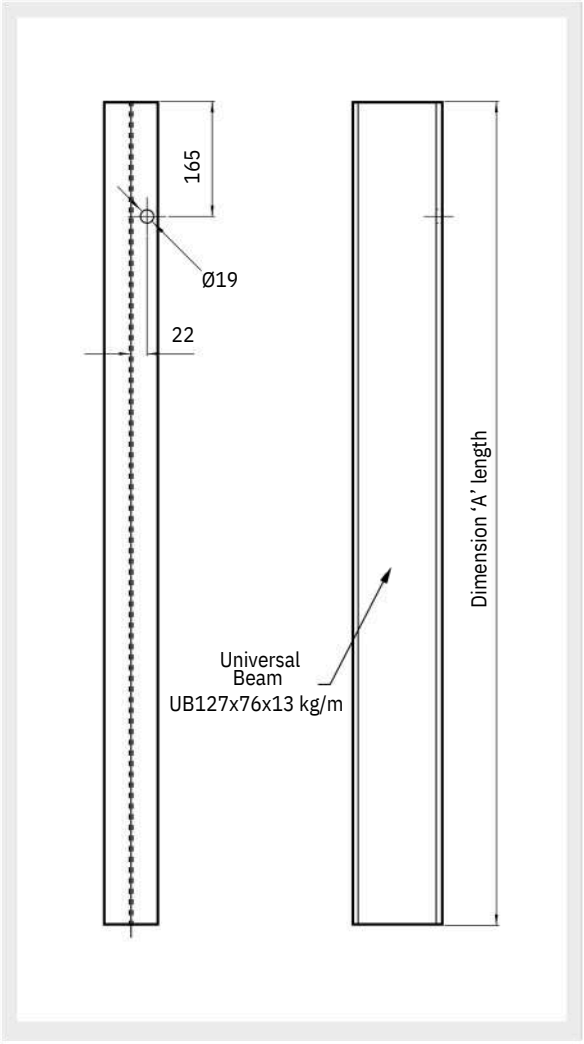



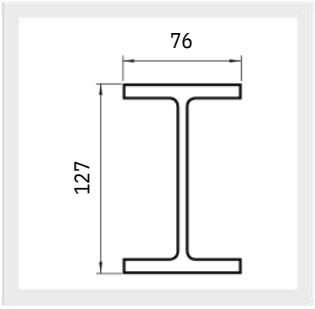

>Posts Surface Mounted RSJ Post

Material Calculator:
>Divide total length of system required by 1.6m or 3.2m and add 1 No
> 1 x F06 Post Bolt to bolt Beam to Post

Notes:
> Material: BS EN 10025 Grade S275JR
> Finish: BS EN ISO 1461 Galvanised
>Base anchor/fixing requirements are dependant on the specific site slab/foundation and would need to be determined and supplied by third parties
(Please see page 11 for post section properties).

Post Variations

Part No	Dim 'A'	Dim 'B'	Weight
ORC001-547	547	-	16.30
ORC001-747	747	-	19.90
ORC001-1095	1,095	410	22.65

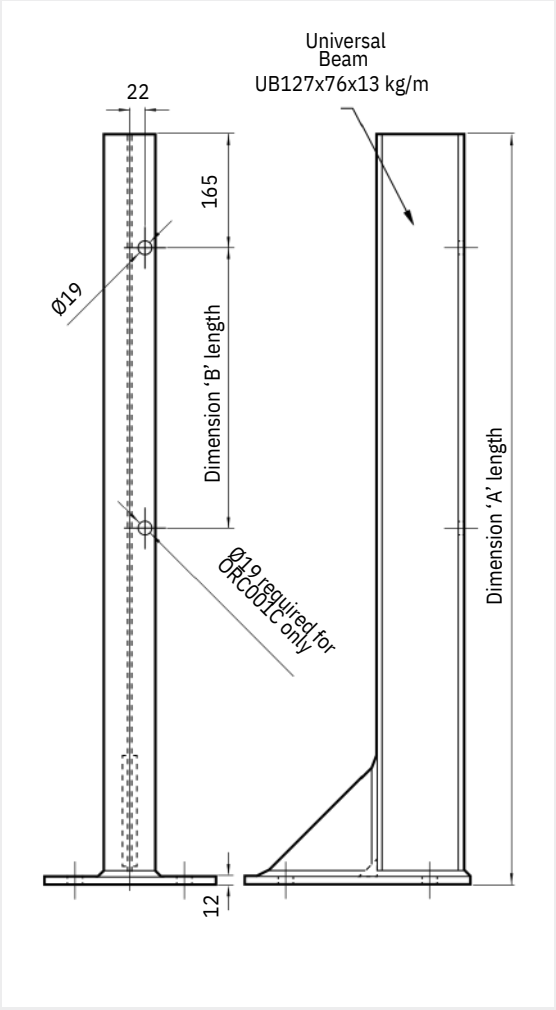

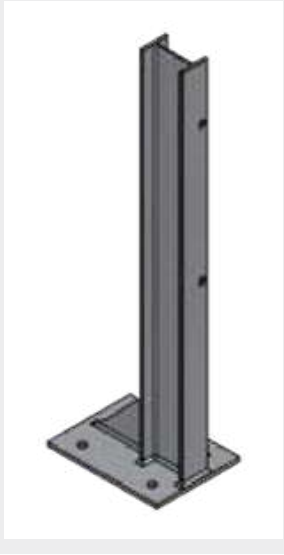

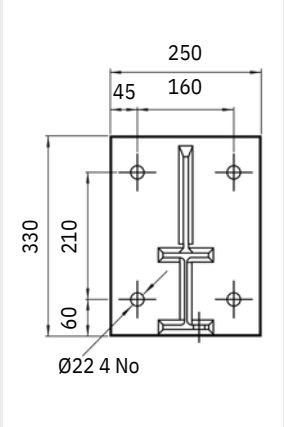

>Corners External & Internal Corners

Material Calculator:
> Add 2 Posts per Corner
> Add 8 No F07SH Lap Joint Bolt per corner
Notes:
> Material: BS EN 10025 Grade S275JR - 3 mm
> Finish: BS EN ISO 1461 Galvanised

Specifications	
Component	Weight (kgs)
ORC005	13.2
ORC006	13.2
ORC018	14.5
ORC019	14.5



ORC005 External Corner 90°



ORC019 External Corner 135°



ORC006 Internal Corner 90°



ORC018 Internal Corner 135°

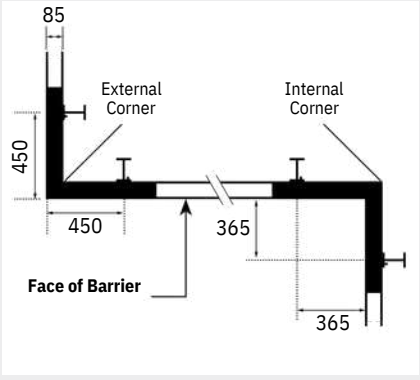

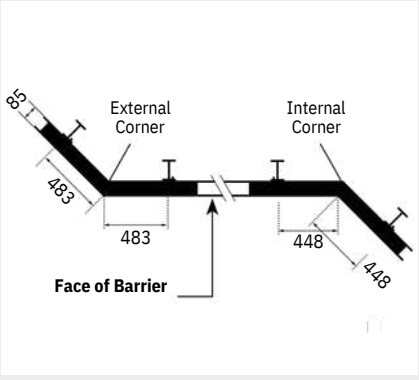

>Beam Ends Corrugated Beam Plastic End Sleeve, Type DEnd Termination, End Shoe and Fishtail End Termination

Material Calculator:
> Add 4 x F07SH Lap Joint Bolt per ORC025
> Add 8 x F07SH Lap Joint Bolt per ORC023 and ORC024

Notes: (Do not apply to ORC004)
> Material: BS EN 10025 Grade S275JR
> Finish: BS EN ISO 1461 Galvanised

Specifications	
Component	Weight (kgs)
ORC004	0.4
ORC023	7.5
ORC024	10.2
ORC025	5.6

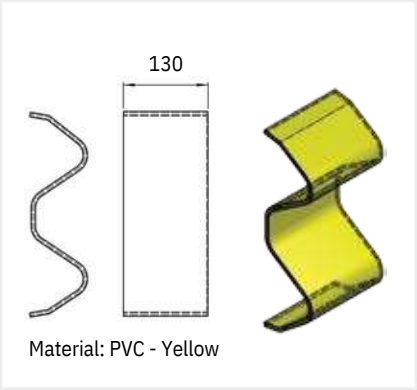

ORC004 Corrugated Beam PVC End Sleeve

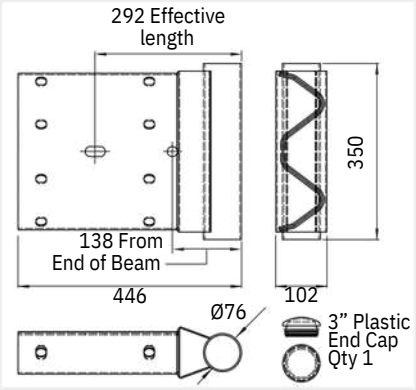

ORC023 Type D End Termination

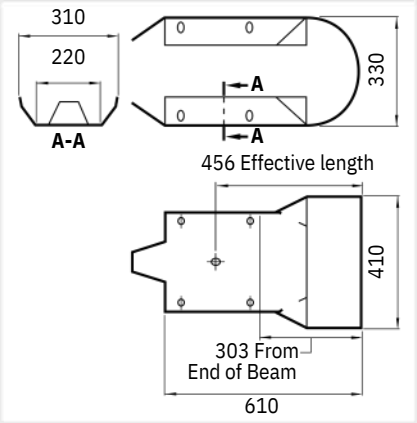

ORC024 End Shoe

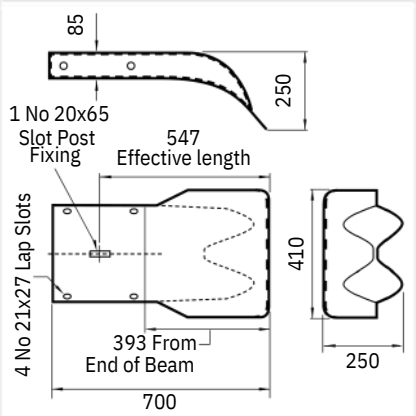

ORC025 Fishtail End Termination

>Powder Coated Finishes

Available by request in the following standard colours:
TrafficYellow-RAL1023,TrafficWhite-RAL9016,TrafficBlack-RAL9017, Traffic Green - RAL6024

>Curves Concave and Convex Barriers

Notes:
> Material: BS EN10025 Grade S275JR2mmor3mm
> Finish: BS EN ISO 1461 Galvanised
> Radius to be measured from traffic face

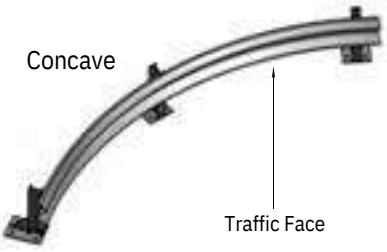

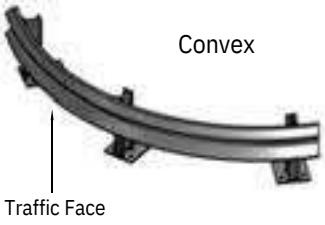

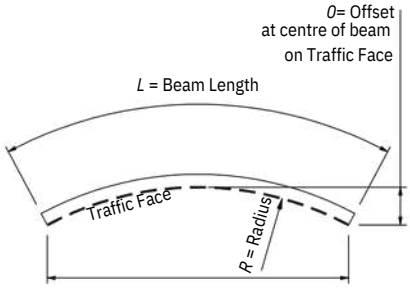

Concave Radius

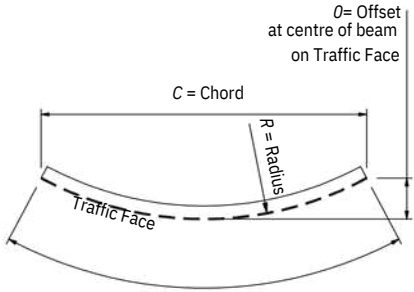

Convex Radius

How to calculate the radius

$$R = (02 + (C/2)2) / (2 \times O)$$

Advisory Note

For a 'traffic face' radius of less than 50m, beams are factory curved. Although beams can be radiused down to 6m it is recommended that the minimum practical radius of 10m is used as the edge of the beam is likely to 'ripple' when formed at a tight radius.

>Off-Road Section Properties

- We are unable to offer a layout/foundation design service. Ideally the foundation/anchorage should be designed to allow the post to plastically fail.
- The strength of the system depends on the properties of the chosen post, post spacing, strength and size of the foundation & base plate anchors (if applicable).
- Posts can be holed for double height and/or double sided.
- Please contact the team regarding BRIFEN wire rope and OBB Off Road options.

	ORC001 ORC002 127x76x13kg/m 'UB' Post Steel Grade – S275	ORC003 125x87x5mm 'Z' Post Steel Grade – S275	ORC009 110x49x5mm 'Z' Post Steel Grade – S275	ORC027 2mm 'W' Beam Steel Grade – S275	C01 3mm 'W' Beam Steel Grade – S275
	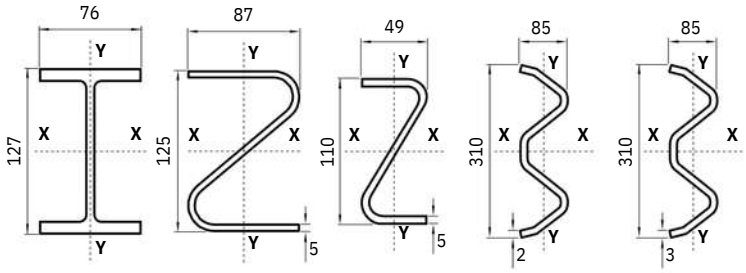				
Sectional Area cm2	16.50	15.45	9.96	9.50	14.47
Ixx cm4	473.0	359.1	163.3	904.5	1384.3
Iyy cm4	55.7	100.0	20.1	65.9	106.6
Elastic Zxx cm3	74.6	57.4	29.7	58.2	89.3
Elastic Zyy cm3	14.7	23.0	8.2	15.5	24.8
ryy cm	1.84	2.55	1.42	2.63	2.71
Plastic Zxx cm3	84.2	68.7	37.4	N/A	N/A



RIDGEWAY
SITE PRODUCTS

THE TOTAL SOLUTION IN BARRIER SYSTEMS





Belfast: +44 (0) 2890454599
Ashbourne: +353 (01) 802 7173
www.ridgeway-online.com
info@ridgeway-online.com